Universal Microwave Components Corp.

Outline Drawing
(5-Way Divider)

Models
PD-0010-5N
PD-0500-5N

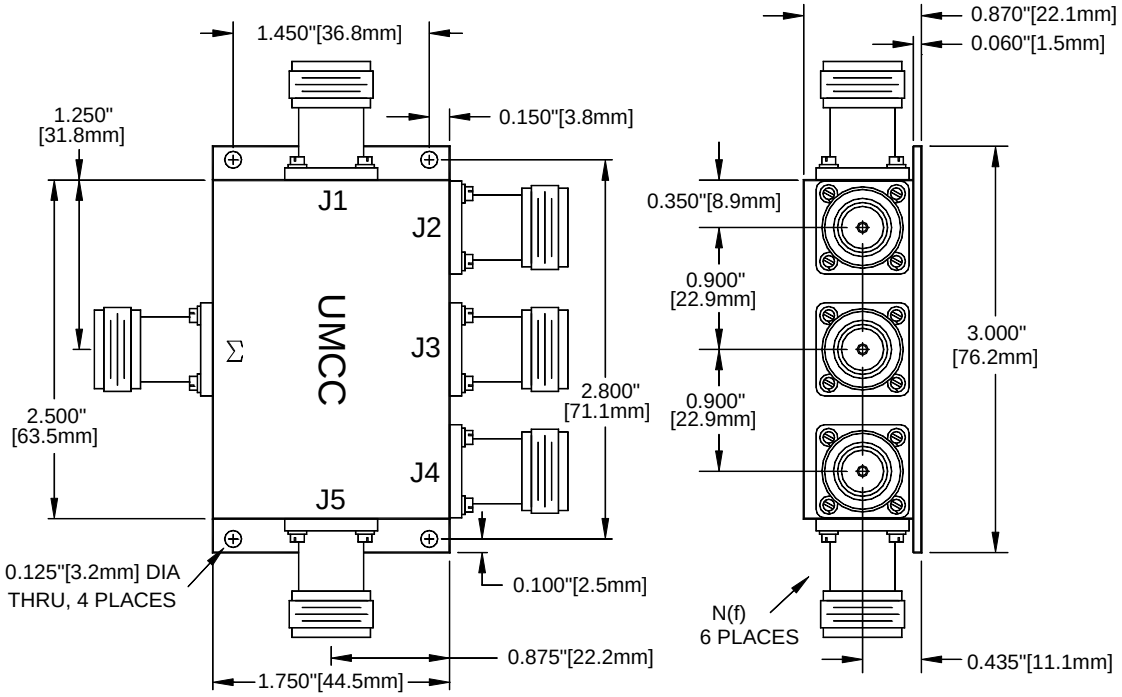

5702-D General Washington Drive Alexandria, VA 22312
Tel: (703) 642-6332, Fax: (703) 642-2568, E-mail: UMCC@UMCC111.COM