Universal Microwave Components Corp.

Outline Drawing

Standard Models
AT-B000-HV
AE-B000-40V

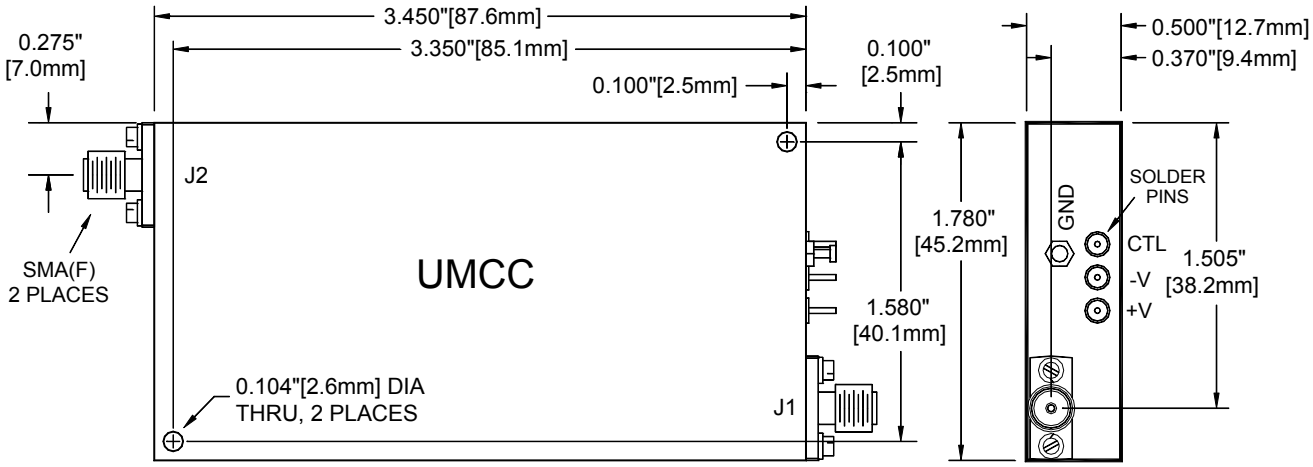

(Tolerances: ±0.015" [0.38mm])

5702-D General Washington Drive Alexandria, VA 22312
Tel: (703) 642-6332, Fax: (703) 642-2568, E-mail: Sales@umcc111.com