Universal Microwave Components Corp.
5702-D General Washington Drive Alexandria, VA 22312 <> Web: www.umcc111.com
E-mail: sales@umcc111.com <> Tel: (703) 642-6332 <> Fax: (703) 642-2568

Model: SR-DA3W-2S

Description:		SP2T, Reflective, PIN-Switch
Operating Frequency:		200 – 4000 MHz
Insertion Loss:		1.8 dB Max
Isolation (Arm-to-Arm):		70 dB Min
VSWR ("ON" paths):		1.5:1 Max
Rise/Fall time (10% to 90% RF, 90% to 10% RF):		250 ns Max
On/Off time (50% TTL to 90% RF, 50%TTL to 10% RF):		300 ns Max
Phase Balance (Deviation from Median):		±1° max
Operating Power:	CW&AVG	+27dBm Max
	Peak:	5W @ 1μS PW & 10% Duty-Cycle Max
Control Input Characteristics:		Std. TTL / Unit-Load / Floating-High
Control Logic:		2-Controls, Logic "0" = RF Path "ON"
Power Supplies:		+5(±0.25)V @ 50mA Max
		-12(±0.5)V @ 50mA Max
Connectors (RF):		SMA (f), Removable
Connectors (Supplies/Controls)		Solder Pins
Impedance:		50 Ohms Nominal
Quality:		Best-Commercial-Grade

Environmental Ratings:

Temperature:	{Operating: -55°C to +95°C} & {Storage: -60°C to +110°C}
Humidity:	MIL-STD-202F, Method 103B, Cond. B (96 hours at 95% R.H.)
Shock:	MIL-STD-202F, Method 213B, Cond. B (75G, 6mSec)
Vibration:	MIL-STD-202F, Method 204D, Cond. B (.06" double amplitude, or 15G)
Altitude:	MIL-STD-202F, Method 105C, Cond. B (50,000 Feet)
Temp. Shock:	MIL-STD-202F, Method 107D, Cond. A (5 cycles)

Available Options:

(Units with listed options here may be subject to some specification tradeoffs from the standard, consult factory)

■ ***Supply Voltages***
- **A1** [+5(±0.25)V / -5(±0.25)V]
- **A2** [+5(±0.25)V / -15(±0.5)V]

■ ***Control Function***
- **F1** [Inverse Logic, ("1" = Path "ON")]
- **F2** [Single Toggle Control ("1" for J1 path "ON")]

■ ***RF Connectors***
- **B1** [J1 & J2 Ports with SMA(M)]
- **B2** [All SMA (M)]
- **B3** [COM Port with SMA(M)]

■ ***Control Impedance***
- **D1** [50 Ω, Internally Terminated]

Outline

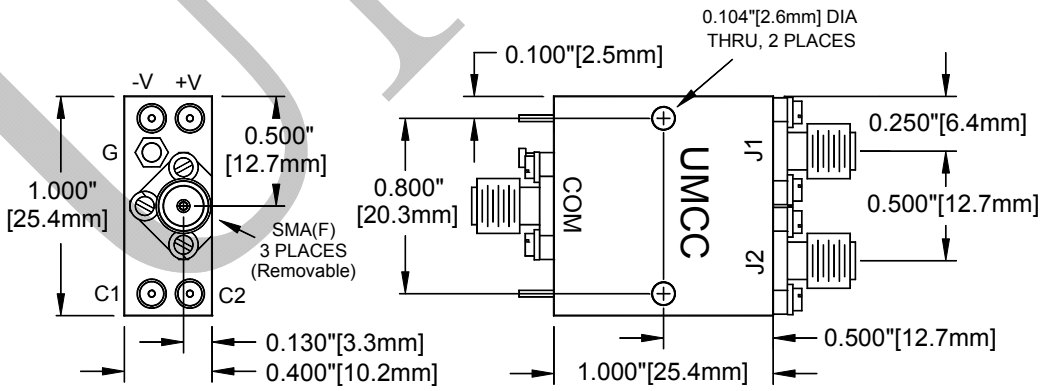

Weight	Tolerances
0.7 oz [19.8 g]	**±0.015" [±0.38mm]**

- Specifications are subject to change without notice