Universal Microwave Components Corp.
5702-D General Washington Drive Alexandria, VA 22312 <> Web: www.umcc111.com
E-mail: sales@umcc111.com <> Tel: (703) 642-6332 <> Fax: (703) 642-2568

Model: SW-L440-5S

Description:..... SP5T, Reflective, PIN-Switch
Operating Frequency:..... 2 – 14 GHz
Insertion Loss: ..... 2.5 dB Max
Isolation (Arm-to-Arm):

2 – 12.4 GHz	12.4 – 14 GHz
55 dB Min	50 dB Min

VSWR ("ON" paths):..... 1.7:1 Max
Rise/Fall time (10% to 90% RF, 90% to 10% RF):..... 10 ns Max
On/Off time (50% TTL to 90% RF, 50%TTL to 10% RF): ..... 40 ns Max
Phase Balance (Deviation from Median):..... ±5° max
Operating Power:..... CW&AVG..... +27dBm Max
..... Peak: ..... 5W @ 1μS PW & 10% Duty-Cycle Max
Control Input Characteristics: ..... Std. TTL / Unit-Load / Floating-High
Control Logic:..... 5-Controls, Logic "0" = RF Path "ON"
Power Supplies:..... +5(±0.25)V @ 70mA Max
..... -12(±0.5)V @ 80mA Max
Connectors (RF): ..... SMA (f), Removable
Connectors (Supplies/Controls) ..... Solder Pins
Impedance: ..... 50 Ω Nominal
Quality:..... Best-Commercial-Grade

Environmental Ratings:

Temperature:..... {Operating: -55°C to +95°C} & {Storage: -60°C to +110°C}
Humidity: ..... MIL-STD-202F, Method 103B, Cond. B (96 hours at 95% R.H.)
Shock: ..... MIL-STD-202F, Method 213B, Cond. B (75G, 6mSec)
Vibration: ..... MIL-STD-202F, Method 204D, Cond. B (.06" double amplitude, or 15G)
Altitude: ..... MIL-STD-202F, Method 105C, Cond. B (50,000 Feet)
Temp. Shock: ..... MIL-STD-202F, Method 107D, Cond. A (5 cycles)

Available Options:

(Units with listed options here may be subject to some specification tradeoffs from the standard, consult factory)

■ ***Supply Voltages***

A1 [+5(±0.25)V / -5(±0.25)V] *
A2 [+5(±0.25)V / -15(±0.5)V]
A3 [+12(±0.5)V / -12(±0.5)V]
A4 [+15(±0.5)V / -15(±0.5)V]

■ ***RF Connectors***

B1 [J1 – J5 Ports with SMA(M)]
B2 [All SMA (M)]
B3 [COM Port with SMA(M)]

■ ***Control Function***

F1 [Inverse Logic, ("1" = Path "ON")]
F2 [3-Bit Binary Controls + Enable] ; see below for "Outline Drawing" and "Function Table"

■ ***Video Suppression Filter***

G1 [VF @ COM Port <> 0.25 dB additional Loss]
G2 [VF @ J1 – J5 Ports <> 0.25 dB additional Loss]
G3 [VF @ All Ports <> 0.5 dB additional Loss]

* Recommended for Low Power Consumption <> Additional Switching Delay (ON/OFF time)

UMCC

Universal Microwave Components Corp.
5702-D General Washington Drive Alexandria, VA 22312 <> Web: www.umcc111.com
E-mail: sales@umcc111.com <> Tel: (703) 642-6332 <> Fax: (703) 642-2568

Model: SW-L440-5S

Outline

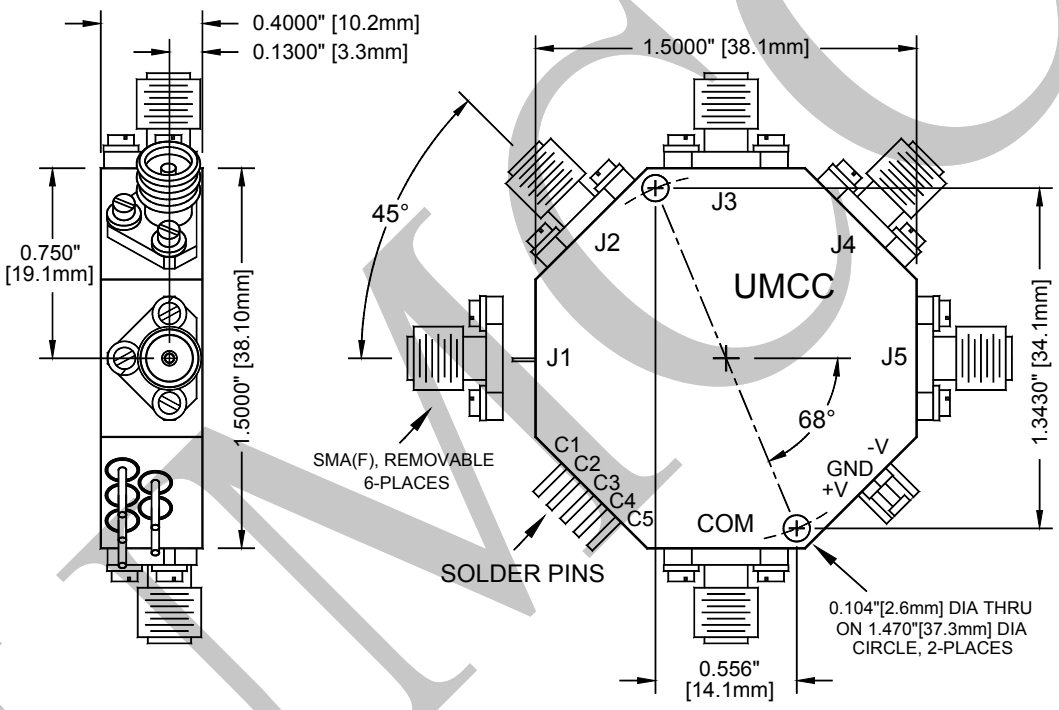

Weight	Tolerances
1.3 oz [36.9g]	±0.015" [±0.38mm]

UMCC

Universal Microwave Components Corp.
5702-D General Washington Drive Alexandria, VA 22312 <> Web: www.umcc111.com
E-mail: sales@umcc111.com <> Tel: (703) 642-6332 <> Fax: (703) 642-2568

Model: SW-L440-5S

Outline Drawing (SP5T Radial with Option "F2")

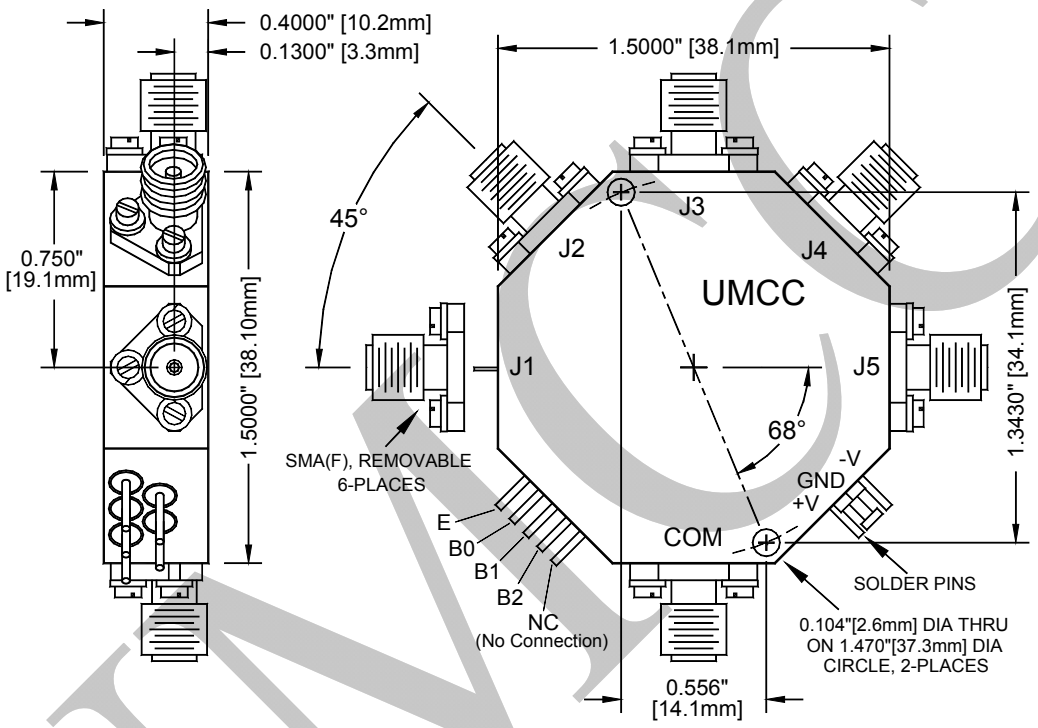

Weight	Tolerances
1.3 oz [36.9g]	±0.015" [±0.38mm]

Function Table for Option "F2" (3-Bit Binary Control + Enable)

INPUTS				RF PATH				
E	B2	B1	B0	J1	J2	J3	J4	J5
1	0	0	0	**ON**	OFF	OFF	OFF	OFF
1	0	0	1	OFF	**ON**	OFF	OFF	OFF
1	0	1	0	OFF	OFF	**ON**	OFF	OFF
1	0	1	1	OFF	OFF	OFF	**ON**	OFF
1	1	0	0	OFF	OFF	OFF	OFF	**ON**
0	X	X	X	OFF	OFF	OFF	OFF	OFF

UMCC